instrumentos de medida

MEASURpoint™

Ultra-Accurate Measurement for Temperature and Voltage

MEASURpoint™ is an ultra-accurate instrument for measuring any combination of thermocouple, RTD, and voltage inputs. MEASURpoint is available as a USB or Ethernet (LXI™ Class C compliant instrument).

MEASURpoint includes the QuickDAQ application to configure and acquire temperature, resistance, and voltage channels, and to display, log, analyze, and export data to other formats including Excel.

MEASURpoint™ provides isolation to earth ground of up to 500V for transients, making it ideal for grid and alternative energy applications including:

- Gas turbines
- Wind turbines
- Battery storage
- Power load distribution and management

Key Features:

- **ISO-Channel™** technology provides galvanic isolation channel-to-channel and to earth ground.
- **Dedicated 24-bit:** Delta-Sigma ADC/ch
- **8DI to 48DI simultaneous** analog inputs
- **Sampling rates:** up to 10Hz/ch
- **Software selectable ranges on voltage boards.**
- **Auto-calibrating front-end:** resets the zero point on each power-up
- **Measurement Instrument Calibration Utility:** allows in-field calibration
- **Digital I/O galvanically isolated to 250V:** 8 in/8 out
- **Packaging options:** compact, rugged 2U, half-rack enclosure.
- **Thermocouple Input channel Features:**
  - **Voltage input range:** ±75mV
  - **Dedicated CJC** (cold junction compensation) input for each thermocouple channel
  - **Supports B, E, J, K, N, R, S, and T** thermocouple types
  - **Break-detection circuitry:** detect open thermocouple inputs
- **RTD Input channel Features:**
  - **Voltage input range:** ±1.25V
  - **4-wire, 3-wire, or 2-wire** PT100, PT500, and PT1000 RTDs supported

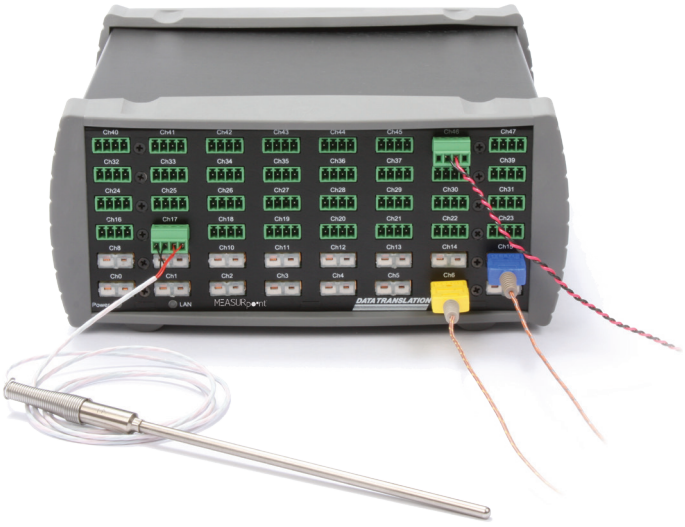

Figure 1. MEASURpoint is an ultra-accurate instrument for measuring any combination of thermocouple, RTD, or voltage inputs with the QuickDAQ application. Available for USB or Ethernet, it provides up to ±500V isolation.

MEASURpoint incorporates proprietary ISO-Channel™ technology that makes measurements almost indestructible and eliminates common mode noise and ground loop problems. In addition, up to forty-eight configurable input channels (depending on the model) offer ultimate flexibility to the user.

Features Summary	
	DT9874/DT8874
Isolation	
Transient (peak)	500V
Channels	
# of Channels (max)	48
Sensor	
Thermocouple	Types B, E, J, K, N, R, S, T
RTD	4-, 3-, 2-wire — PT100, PT500, PT1000
Voltage	±75mV, ±1.25V, ±10V, ±100V, ±400V
CJC Configuration	CJC per ch

All systems have 10Hz/channel throughput rate and use a high stability 24-bit delta-sigma A/D per channel.

- **MEASURpoint Software Features:**
  - **QuickDAQ** – Acquire and display from all Data Translation USB and Ethernet devices that support analog input streaming. Acquire data, record data to disk, display the results in both a plot and digital display, and read a recorded data file. Two additional options can be purchased to add FFT analysis capabilities to the base package. Also, data can be exported to other applications like Microsoft Excel® and MATLAB® for more advanced analysis
  - **IVI-COM driver** works in any development environment that supports COM programming, including Measure Foundry®, Visual Basic®, Visual C#® .NET, MATLAB®, VEE Pro, LabVIEW® or LabWindow, and others
  - **SCPI support:** SCPI (Standard Commands for Programmable Instruments) is a universal programming language for electronic test and measurement instruments, based on the IEEE 488.1 and IEEE 488.2 standards

Analog Input Flexibility

The MEASURpoint instrument provides up to 48 configurable channels (depending on the model), allowing for ultimate flexibility with thermocouple, RTD, and voltage inputs. Because MEASURpoint architecture uses an A/D per channel, sampling rates of up to 10Hz per channel simultaneously can be achieved.

The RTD input channels provide a 4-wire RTD input with Kelvin sensing for maximum accuracy by eliminating errors due to wire resistance. You can attach a voltage input or any of the following RTD types to these channels in a mix and match fashion: Platinum 100 Ω (Pt100), Platinum 500 Ω (Pt500), or Platinum 1000 Ω (Pt1000) RTD using an European alpha curve of 0.00385 or an American alpha curve of 0.00392. The supported temperature measurement range for these RTD types is –200°C (–328°F) to 850°C (1562°F). You can also measure a resistance value, in Ohms, if desired. The analog input range is ±1.25V.

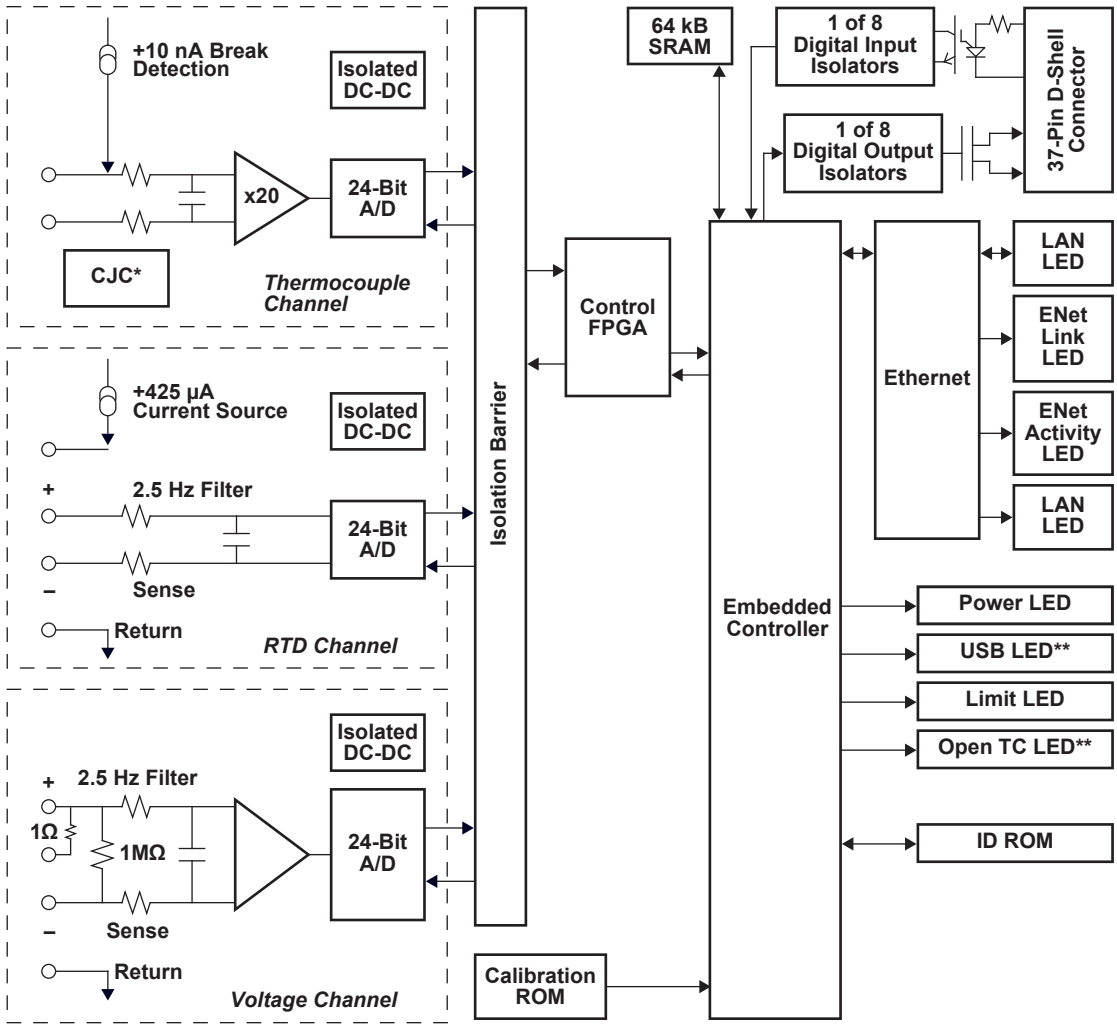

**CJC per channel*
***Not used on LXI instruments.*

Figure 2. Block diagram.

CJC Circuit

Thermocouples are "relative" not "absolute" temperature measuring devices that generate voltage as a function of the temperature difference between both ends. The DT9874 and DT8874 incorporate an independent CJC circuit for every channel. The board-level CJC is embedded in a metal bar for excellent thermal conductivity and optimum consistency.

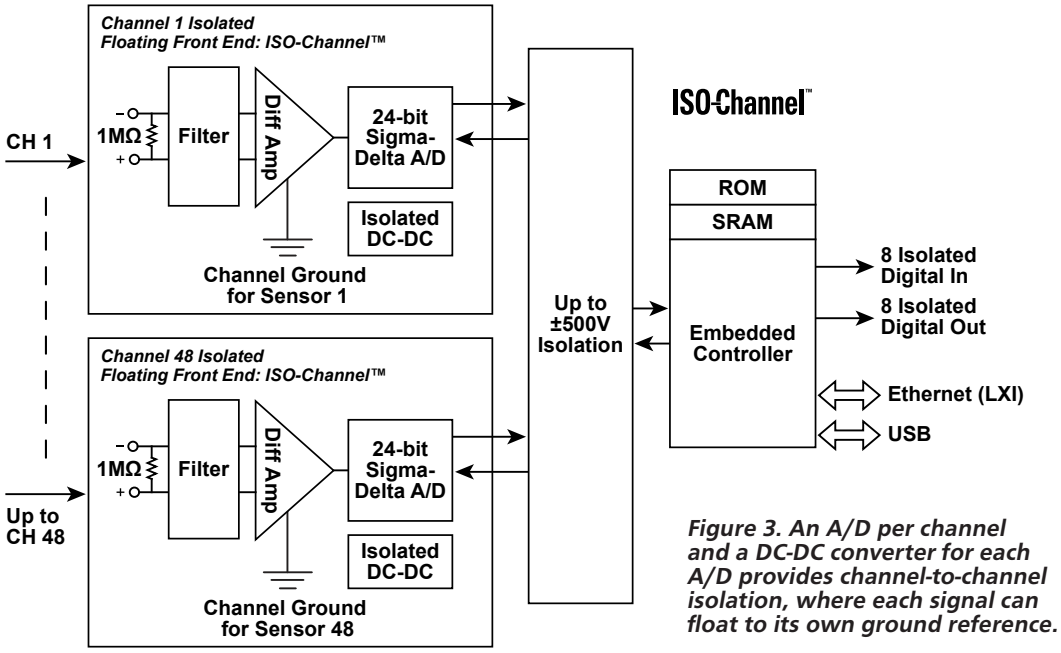

Figure 3. An A/D per channel and a DC-DC converter for each A/D provides channel-to-channel isolation, where each signal can float to its own ground reference.

Galvanic Isolation with ISO-Channel™

ISO-Channel™ uses galvanic isolation methods to guarantee up to ±500V isolation between any input channel to any other input channel and earth ground. Common-mode noise and ground loop problems are eliminated with ISO-Channel since sensors that are at different ground reference levels are easily accommodated.

The result is that accuracy is preserved for all sensor inputs. This is especially useful when conditions change in the electrical environmental due to motor current surges, electromagnetic radiation, or noisy industrial equipment turning on/off. A vast majority of thermocouple applications reside in industrial environments. ISO-Channel™ technology makes measurements almost indestructible.

Triggers

A trigger is an event that occurs based on a specified set of conditions. Acquisition starts when the instrument detects the initial trigger event and stops when the buffer has been filled or you stop the operation. MEASURpoint instruments support a software trigger and an external trigger on digital input line 0.

Digital Input/Output Lines

MEASURpoint instruments feature eight, isolated, digital input lines. The digital input lines operate from +3 to +28V DC, with a switching time of 2ms maximum.

MEASURpoint instruments are perfect for driving relays directly, featuring eight, isolated, digital output lines. The outputs are solid-state relays that operate at ±30V and 400mA peak (AC or DC) with a switching time of 2ms maximum.

High-Stability, Low Drift Voltage References

MEASURpoint uses high-precision, high-stability, low-drift voltage references rated at 4 PPM per degree and 100 PPM drift per year. This means MEASURpoint is accurate now and will remain that way over time.

Custom Designed DC-DC Converters

Our custom DC-DC converters circuits have a unique power distribution system that supplies power to only 2 of the 6 boards at any one time. Cycling non-adjacent boards in this manner creates less power surges, reduces noise, and improves the overall system performance.

Field Calibration

Users can calibrate any MEASURpoint instrument in the field using precise calibration equipment and the Measurement Instrument Calibration Utility. This free utility allows you to revert to the factory calibration for any or all channels, or revert back to the last user calibration values, if desired. In addition, this utility generates a report that lists the starting and ending calibration values for each channel, allowing traceability.

Remote Measurements

The network-ready versions of MEASURpoint are LXI™ Class C compliant and provide a standard Ethernet connection to support remote monitoring and control from the field or on the factory floor. Channels can be expanded by adding more instruments to the network.

QuickDAQ

QuickDAQ allows you to acquire and display from all Data Translation USB and Ethernet data acquisition devices that support analog input streaming. Combine QuickDAQ with Data Translation hardware to acquire data, record data to disk, display the results in both a plot and digital display, and read a recorded data file. Be productive right out of the box with this powerful data logging software. Data can be exported to other applications like Microsoft Excel® and The Mathworks MATLAB® for more advanced analysis. Two additional options can be purchased to add FFT analysis capabilities to the base package.

Key Features:

- **QuickDAQ Base Package (Free)**
  - Ready-to-measure application software
  - Configure, acquire, log, display, and analyze your data
  - Customize many aspects of the acquisition, display, and recording functions to suit your needs
- **FFT Analysis Option (License Required)**
  - Includes all the features of the QuickDAQ Base Package
  - Perform single-channel FFT operations
  - Configure and view dynamic performance statistics
  - Supports Hanning, Hamming, Bartlett, Blackman, Blackman Harris, and Flat Top response windows
- **Advanced FFT Analysis Option (License Required)**
  - Includes all the features of the QuickDAQ Base Package and FFT Analysis Package
  - Perform 2-channel FFT operations
  - Supports real, imaginary, and Nyquist display functions
  - Additional FFT analysis functions supported: Exponential, Force, Cosiner Taper
  - Save data to .uff file format

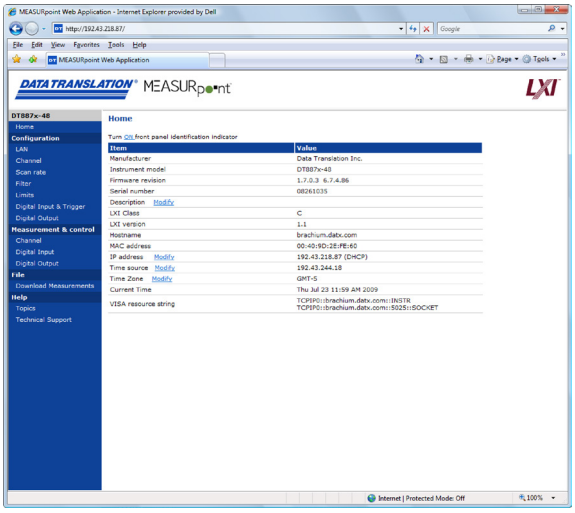

Figure 6. The main web page displays information about your instrument on the network.

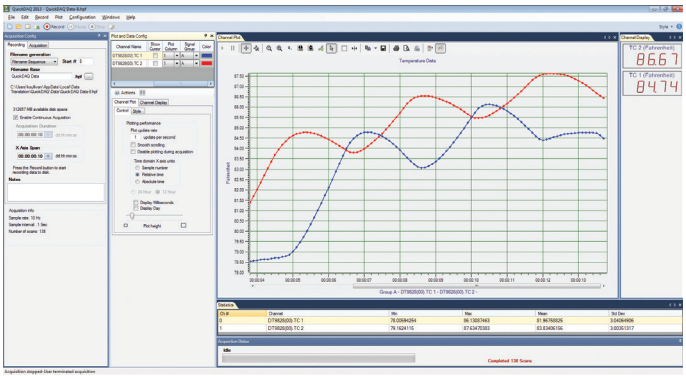

Figure 5. QuickDAQ ships free-of-charge and allows you to get up and running quickly.

Additional Software Support

The following software support is available for all MEASURpoint instruments:

- **Measurement Instrument Calibration Utility** – The calibration utility allows you to calibrate a MEASURpoint instrument in the field. Using this utility, you can revert to the factory calibration for any or all channels, or revert back to the last user calibration values, if desired. In addition, this utility generates a report that lists the starting and ending calibration values for each channel, allowing traceability.
- **Eureka Discovery Utility** — This utility helps you locate or "discover" all LXI (Ethernet) instruments that are connected to your system and provides the following information about your instrument: the IP address, manufacturer, model number, serial number, and version of the firmware that is running on your instrument. In addition, you can use this utility to configure Windows firewall settings and update the firmware for your Data Translation LXI instrument.
- **Instrument Web Interface** — This built-in interface allows you to verify the operation of your instrument and perform basic functions with Internet Explorer and no additional software. Using it, you can configure your instrument, control output signals, measure input signals, and save results to disk.
- **IVI-COM Driver** — This driver is provided to write application programs for MEASURpoint using an IVI-COM instrument interface. It can be used with programs written in Visual C#®, Visual Basic® for .NET, or C++ under Visual Studio® 2003 to 2012. You can also use the IVI-COM driver with LabVIEW® from National Instruments' or MATLAB® and the Instrument Control Toolbox from the MathWorks™ to program MEASURpoint instruments.
- **SCPI Commands** — Use VISA or network sockets to program and control MEASURpoint LXI instruments by sending SCPI commands. Comprehensive user manual and example programs provided.

Ordering Summary

MEASURpoint Instruments

DTx874–xxT -xxR-xxV

T = Thermocouple Channels
R = RTD Channels
V = Voltage Channels

00 = No Channels
08 = 8 Channels
16 = 16 Channels
24 = 24 Channels
32 = 32 Channels
40 = 40 Channels
48 = 48 Channels

8 = Ethernet
9 = USB (available with ±500V only)

Ordering Example
DT9874-16T-16R-16V MEASURpoint USB instrument configured with 16 thermocouple channels, 16 RTD channels, and 16 voltage channels.

Options

- **STP37** – Digital I/O screw terminal panel
- **EP373** – Single Rack-Mount Kit for DT9874/DT8874
- **EP374** – Dual Rack-Mount Kit for DT9874/DT8874

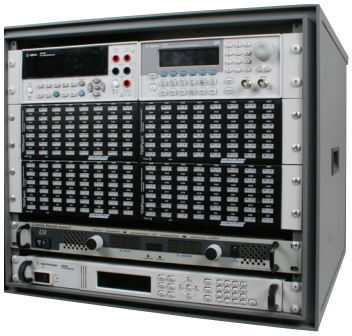

MEASURpoint Instruments with Rack Mount Kit

instrumentos de medida

Septiembre, 31 28022 Madrid
Tel. 913000191 Fax. 913885433
www.idm-instrumentos.es
idm@idm-instrumentos.es

Copyright © 2016 Data Translation, Inc. All rights reserved. All trademarks are the property of their respective holders.
Prices, availability, and specifications are subject to change without notice.

DATA TRANSLATION®
A MEASUREMENT COMPUTING COMPANY