Model DTS3250

Digital Temperature Scanner

Data Sheet No. G550

Scanivalve

Universal Thermocouple Scanner

Features

- Accepts type E, J, K, N, R, S, T, and B
- Engineering Unit output, °C, °F, °R, or K
- Ethernet TCP/IP & UDP protocol
- 1000Vdc channel-to-channel isolation
- 600Vdc input isolation
- 50 - 60 Hz noise rejection
- Open thermocouple test
- 1000 Vdc input isolation
- 16, 32, and 64 channel

DTS3250/32 Channel (shown)

General Description

The DTS3250 series temperature acquisition system represents the next generation of intelligent thermocouple scanning. Model DTS3250, Digital Temperature Scanner, accepts 16, 32, or 64 pairs of thermocouple inputs. It incorporates RAM, Integral Low Pass Filters, 22 bit A/D converters, and a microprocessor, in a rugged stand alone module. The DTS module is specifically designed for high-noise environments and as such can withstand unmatched common mode noise.

An isothermal block is incorporated for the Uniform Temperature Reference (UTR) for each 16 channel input. NIST thermocouple tables for standard thermocouple types are stored in flash memory. The microprocessor uses these look-up tables to convert mV inputs to Engineering Units. Temperature data are output in °C, °F, °R, K, millivolts and counts.

The DTS3250 accuracy for types E, J, K, N, and T is ± .25°C to ±0.5°C depending on the thermocouple type and the useful temperature range. (Refer to accuracy table for a complete listing of supported thermocouples and associated accuracies)

Multiple standard thermocouple types may be used with one Intelligent Temperature Scanner, Model DTS3250.

Applications

The DTS3250 Digital Temperature Scanner is ideal for use in turbine engine, diesel engine, and compressor test cells, as well as other industrial environments such as boiler and oven temperature monitoring. The module has a stainless steel enclosure with a locking lid for input terminal access. The standard DTS is insulated, rugged, and splash resistant and is mounted on environmental shock mounts.

The DTS3250's electronics were specifically designed to endure punishing high EMI noise environments while still being able to provide accurate engineering data.

The 32 & 64 channel DTS3250 modules are optionally available with a 19 inch rack mount kit.

The DTS3250 Intelligent Scanner is typically mounted in close proximity to the test article, thus minimizing thermocouple wire lengths. Shorter thermocouple wires not only reduce errors, but also lower costs due to the elimination of extension cables. Field calibrations can be used to modify coefficients which can also improve overall system accuracy.

The standard DTS3250 module accepts two wire or three wire shielded thermocouples.

DTS3250 Module

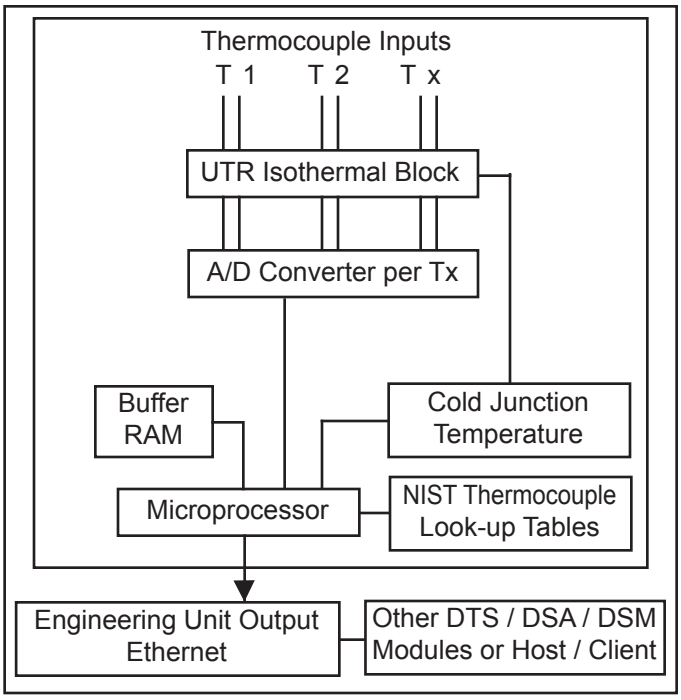

Temperature Measurement

There are a number of standardized thermocouple types available on the market. Each has different properties, which makes them suitable for specific temperature ranges and environmental conditions.

Accuracy of a thermocouple measurement is highly dependent upon the reference junction connection, its material, installation techniques, and temperature.

The DTS3250 intelligent temperature scanner measures the mV signal from the thermocouples and compensates for the temperature of the cold junction.

NIST mV-temperature tables for each type thermocouple listed in this brochure are stored in the DTS3250 flash memory. This table is broken down into increments of .1°C. The DTS3250 microprocessor utilizes the compensated EMF and the NIST look-up table for conversion to engineering units. Temperature data are then output via Ethernet with TCP/IP protocol.

Common Mode Rejection

The DTS3250 product line was specifically designed to operate in environments high levels of EMI. The DTS' unique architecture allows it to precisely read microvolt signals even amongst hundreds of volts of common mode noise. Supporting this capability, the DTS is built around a robust front end. Every thermocouple input channel has its own dedicated A/D circuit providing a huge, 1000Vdc channel-to-channel isolation buffer. It is this unique parallel front end architecture that provides the DTS' unmatched common mode rejection ratio.

The specific common mode rejection ratio will vary between installations depending on the voltage, frequency, scan rate and thermocouple type used, but the graph below can be used to roughly determine the MicroVolt offset caused by various common voltages across the frequency spectrum. In addition to the 1000Vdc channel-to-channel isolation, the DTS also is built do endure a sustained 600Vdc per channel of input isolation, while still providing accurate engineering unit data output.

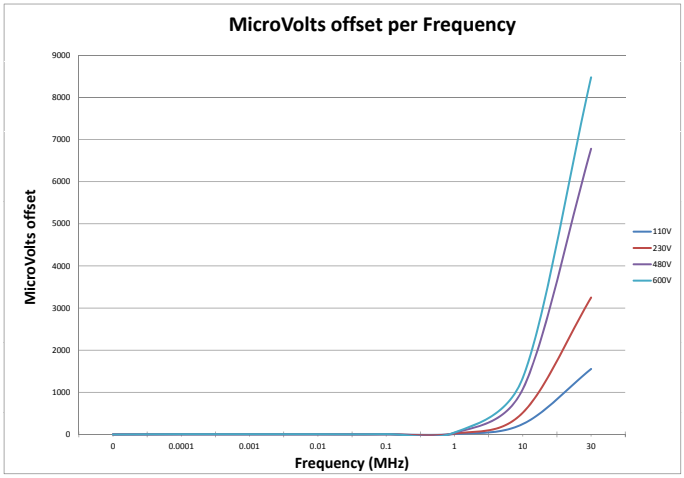

In order to take advantage of the DTS's high common mode rejection capability, the DTS was also designed to endure the physical stresses that can be associated with high-noise environments. The DTS is mounted on Mil-Spec rated shock mounts and enclosed in a rugged stainless steel chassis. The integrated UTR block and included insulation cover provide a stable, accurate reference point for all incoming thermocouple junctions.

DTS3250 System / Specifications / Ordering

DTS3250 Communications

The DTS3250 module interfaces directly to a host via an Ethernet connection. Scanivalve's optional Configuration Utility software for LabVIEW® Runtime is designed to assist a user in establishing communications and configuring the DTS module.

Additionally available is a Software Development Kit for users who want to write their own detailed data acquisition program in LabVIEW®. This Development Kit includes the Configuration Utility software and examples to assist a user in the setup of the system. An OPC driver is also available.

Specifications

Inputs (Px): 16, 32, or 64 pairs of 6-32 brass screw terminals plus shields or optional panel jack connectors

Thermocouple Types:
screw terminal: E, J, K, N, R, S,T, and B
panel jack option: E, J, K, and T

DTS3250 Accuracy:

Accuracy Table		
Thermocouple Type	Accuracy over Full Operating Range	Accuracy at Constant Ambient
E,J,K,N, and T	±0.5°C	±0.25°C
R and S	±2.0°C	±1.0°C
B	±4.0°C	±2.0°C

UTR Accuracy: ±0.1°C

A/D Resolution: 22 bit

Scan Rate:**
64Tx: 10 samples/channel/second
32Tx: 20 samples/channel/second
16Tx: 40 samples/channel/second

Operating Temperature:

	Std unit	with optional heater
16Tx	-10 to 60°C	-30 to 60°C
32Tx	-5 to 60°C	-30 to 60°C
64Tx	-5 to 60°C	N/A

Communication: Ethernet 10baseT
RS-232 (configuration only)

Output: °C, °F, °R, K, mVolts, or Counts

Communication Protocol: TCP/IP or UDP

Mating Connector Type:
10BaseT: Bendix PTO6A-8-4S
Power: Bendix PTO6A-8-3S, 3 pin female
RS232/Trigger: Bendix JTO6RE8-6S-SR, 6 pin female

Power: (21–36Vdc)
Standard—No heater:
16Tx: .52 Amps @ 28Vdc
32Tx: .83 Amps @ 28Vdc
64Tx: 1.45 Amps @ 28Vdc
With Optional Heater:
16Tx: 1.6 Amps @ 28Vdc
32Tx: 4.8 Amps @ 28Vdc

External Trigger: 6.5 mA at 9 Vdc minimum leading edge sensing

Weight:
Screw terminal-16 Tx: 13.00 lbs (5.9 kg)
Panel jack option-16 Tx: 12.00 lbs (5.45 kg)
Screw terminal-32 Tx: 14.0 lbs (6.36 kg)
Panel jack option-32 Tx: 13.5 lbs (6.13 kg)
Screw terminal-64 Tx: 25.0 lbs (11.35 kg)

Input/Output Isolation: 600 Vdc

Channel-Channel Isolation: 1000 Vdc

CE Mark Standards‡: IEC 1000-4.2, 1000-4.3, 1000-4.5

*System accuracy specifications are valid after a one hour warm up period. Accuracy does not include Thermocouples, Thermocouple Extension Wire, or Panel Jack Connector option.

**Contact factory for faster sampling speeds.

‡CE Mark certification applies to screw terminal version only.

Ordering Information

DTS3250 / 16Tx ___ / (Specify "Optional Heater")

- DTS3250: Model
- 16Tx: No. of Inputs -16, -32, -64
- ___: blank, screw terminals; PJ, standard 3 prong panel jack input (Specify thermocouple type E, J, K or T) PJ not available for 64Tx
- (Specify "Optional Heater"): Specify "optional heater" for 16 or 32 channel modules

For 32 channel rack mount kit, order 21995-2
For 64 channel rack mount kit, order 21195-1.

DTS3250 Dimensions

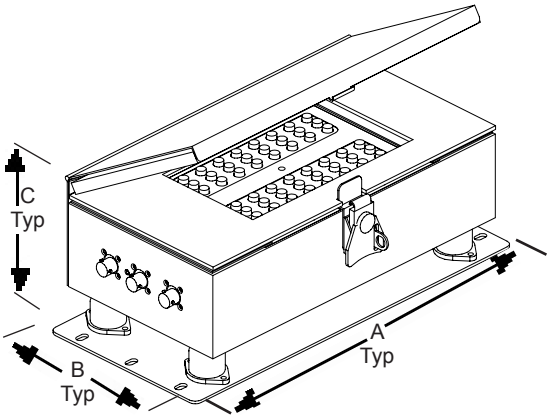

16Tx
Screw Terminal Inputs

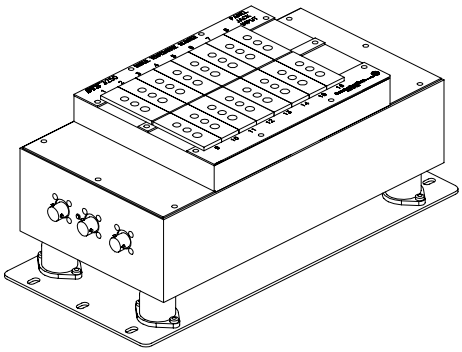

16Tx
Panel Jack Connector Inputs

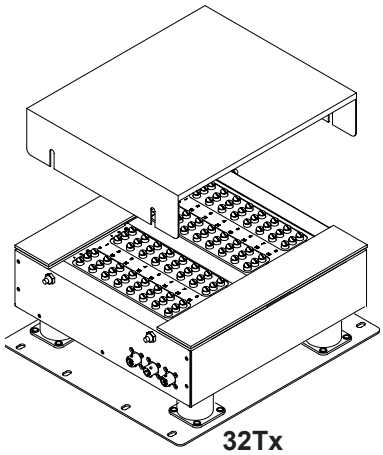

32Tx
Screw Terminal Inputs

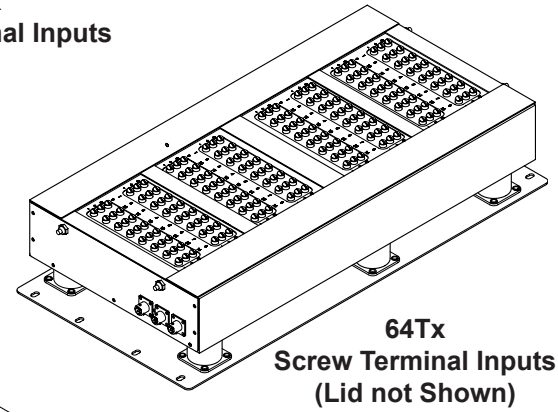

64Tx
Screw Terminal Inputs
(Lid not Shown)

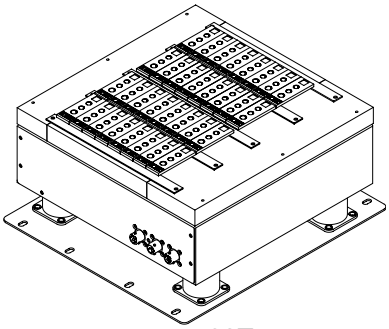

32Tx
Panel Jack Connector Inputs

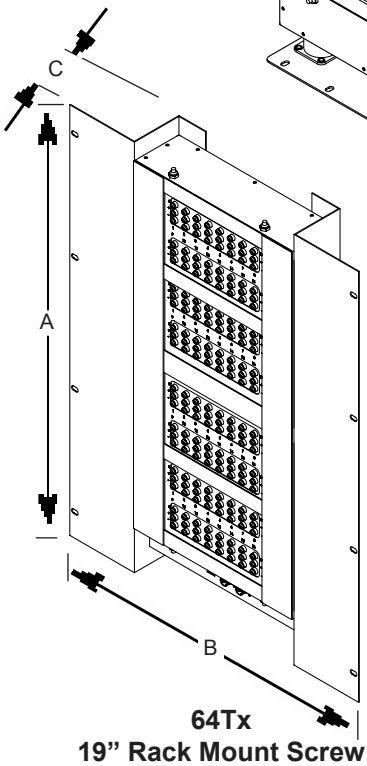

64Tx
19” Rack Mount Screw
Terminal Inputs

Model DTS 3250	Dimensions (inches) Mounting Plate			Dimensions (cm) Mounting Plate		
	A (Length)	B (Width)	C (Height)	A (Length)	B (Width)	C (Height)
16Tx-screw terminal:	13.5	6.19	5.12	34.29	15.72	13.00
16Tx-panel jack:	13.5	6.19	5.34	34.29	15.72	13.00
32Tx-screw terminal:	12.0	10.75	5.58	30.48	27.31	14.17
32Tx-panel jack:	12.0	10.75	5.71	30.48	27.31	14.50
64Tx-screw terminal:	23.32	10.75	5.58	59.23	27.31	14.17
64Tx-rack mount screw terminal:	24.0	19.00	4.00	60.96	48.26	10.16

Specifications are subject to change without notice.

Scanivalve Headquarters
1722 N. Madson Street
Liberty Lake, WA 99019
Tel: 509-891-9970
800-935-5151
Fax: 509-891-9481
e-mail: scanco@scanivalve.com

Scanivalve
www.scanivalve.com

Printed in USA